STUF-280W

ULTRASONIC WATER METER

Features:

- Wear-free ultrasonic measurement.
  No moving parts. No maintenance needed
- Proprietary robust sensor design. Not impacted by water impurity
- Counts each drop. Very low start flowrate
- Excellent long-term stability. Accuracy does not degrade over time
- Not affected by magnetic interference
- OIML R49 standard. CE Approval
- Low pressure drop
- For both hot and cold water
- Free positioning for mounting
- Battery supply for 10 more years
- M-Bus powered (optional)
- Pulse / M-Bus / RS485 for remote readout
- Optional M-Bus concentrator and BACnet concentrator
- Optional AMR system solution, including data collection and billing software
- Optional wireless remote reading
- IP 68 (optional). Tamper-proof design
- Low cost over the long run

Ultrasonic Water Meter, DN15~DN40

Ultrasonic Water Meter
DN50~DN600

The STUF-280W water meter offers the most advanced water measurement by using state-of-the-art ultrasonic flow measurement technology. It does not have any moving parts that can wear out, thus, literally requires no maintenance. It is also very cost-effective. Both commercial and residential installations can profit from the advantages of the wear-free heat measurement, namely, precision, operation security and long service life.

1. Operating Principle

STUF-280W water meter is consisted of an ultrasonic flow sensor and an electronic console box. The microprocessor-based console controls the ultrasonic sensor to transmit and receive ultrasound pulses in an orderly fashion so as to conduct precise flow measurement.

The figure on the right illustrates how the ultrasonic flow sensor works. Two ultrasonic transducers (A and B) are mounted on a spool-piece face-to-face, one is on the upstream and the other on the downstream. The electronic console (e.g., the counter unit) operates by alternately transmitting and receiving a burst of sound energy between the two transducers and measuring the transit time it takes for sound to travel between the two transducers. The difference in the transit time measured corresponds directly to the velocity of the liquid in the pipe. The pipe flowrate is computed by multiplying the measured velocity and the cross-section area of the pipe.

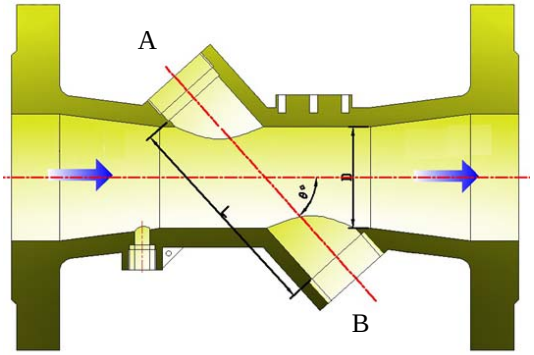

2. Applications

Suitable for Both Commercial and Residential Applications

With its operating temperature as high as 60°C (could be much higher for temporary operation) and nominal pressure of 1.6MPa, the technical specifications of STUF-280W meet the standards for residential as well as commercial meters. The wide dynamic range allows for a load of up to double the rating, thereby ensuring high operation security.

This compact meter fits into even the smallest installation locations and can be mounted separately from the electronics console. The large display can be set to display the water consumption, flow rate or working time. The meter also has a remote readout which could be configured as pulse, M-Bus or RS485. A wireless module is also available upon request.

Automatic Meter Reading (AMR) System for Building Water Management

When equipped with the M-Bus module, as many as 300 water meters can be networked through a two-wire bus to a central location for integrated resource management.

A concentrator and a data acquisition software program, Data Center Manager, make the system installation and integration very easy. Shenitech provides the whole system solution for automatic meter reading (AMR) as well as billing (below right).

An alternative for AMR is to use Shenitech's BACnet concentrator. This concentrator is able to connect hundreds of water meters to a BACnet bus for building automation (below left).

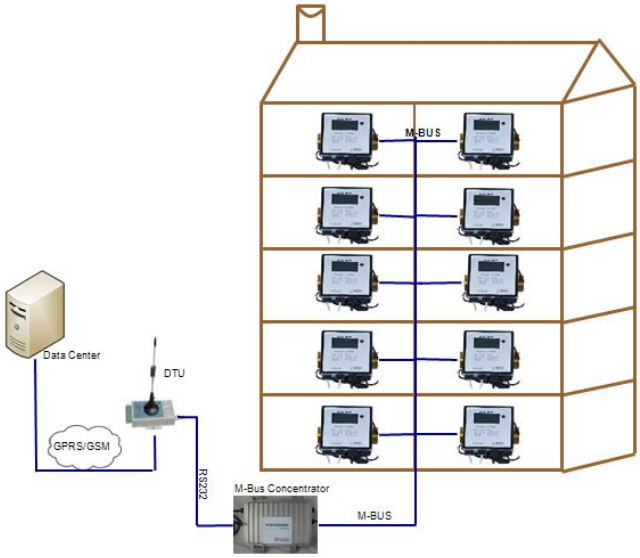

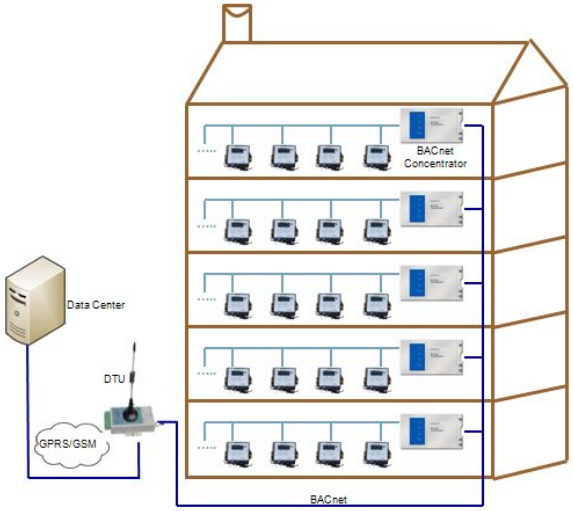

3. Specifications

Size (mm)	Flowrate (m^3/h)					Pressure Loss (bar)	Length (mm)		Weight (kg)	Pipe Join
	Q_3	Q_4	Q_2	Q_1	Q_s		L	L1		
15	1.6	2.3	0.025	0.016	0.001	<0.45	130	223	0.71	G3/4″
20	2.5	3.75	0.04	0.025	0.002	<0.4	130	223	0.69	G1′
25	4.0	6	0.064	0.04	0.003	<0.3	160	279	0.87	G1′1/4
32	6.3	9.45	0.1	0.063	0.003	<0.3	180	303	1.13	G1′1/2
40	10	15	0.16	0.1	0.004	<0.25	200	327	1.44	G2′
	Q_n	Q_{max}		Q_{min}				H		
50	15	30		0.6		<0.25	200	170	6.7	Flange – Nut 4-M16
65	25	50		1.0		<0.25	200	160	7.0	Flange – Nut 4-M16
80	40	80		1.6		<0.25	225	200	9.0	Flange – Nut 8-M16
100	60	120		2.4		<0.25	250	215	12.5	Flange – Nut 8-M16
125	100	200		4.0		<0.25	250	215	14.0	Flange – Nut 8-M16
150	150	300		6.0		<0.25	300	280	16.5	Flange – Nut 8-M20
200	250	500		10.0		<0.25	350	330	20.5	Flange – Nut 8-M20
250	400	800		16.0		<0.25	450	395	25.0	Flange – Nut 12-M24

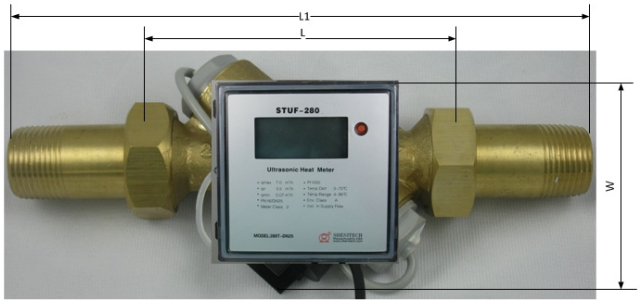

Dimension for DN15~DN40

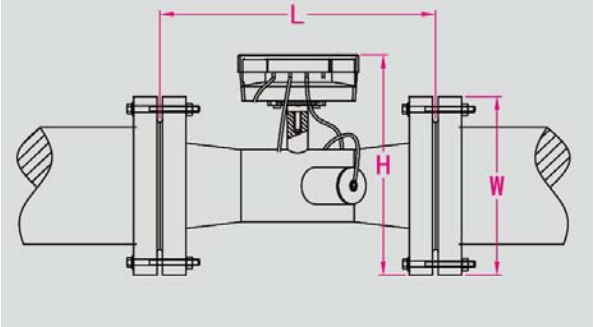

Dimension for DN50 and above

Pressure:	≤1.6MPa
Static current:	<10uA
Battery type:	Lithium, 3.6V
Battery life:	> 6 years, or, > 10 years (optional)
M-Bus powered:	Yes (optional)
Accuracy Class:	Class 2 (OIML R49)
Medium Temperature:	0.1 – 60°C for long term and up to 95°C for short term
Environmental class:	B, or, C (outdoor, optional)
Environmental temp:	-25°C ~ 55°C
Enclosure protection:	IP65, or, IP68 (optional)
Lid Cover protection:	Yes, plastic lid (optional)
Flow sensor cable length:	1.2m (longer cable available upon request)

Note:

- *The OMIL R49 standard only applies to meter size smaller than DN50.*
- *Pipe joint could be NPT / ANSI flange upon request.*

4. Model Selection

For water meter:

STUF-280W-DNx-y-z-w or **STUF-280W-INx-y-z-w**

where **x** is the pipe size in mm, **y** is the output option (0: pulse, 1: M-Bus, 2: RS485), **z** is the pipe joint option (0: BSP, 1: NPT, 2: Metric Flange, 3: ANSI Flange), w is the option for accessory (extension connector. For DN40 or small size only).

Example 1:
STUF-280W-DN25-1-0 stands for the STUF-280W water meter for pipe DN25mm with M-Bus, BSP joint.

Example 2:
STUF-280W-IN1-1-1 stands for the STUF-280W water meter for pipe 1” with M-Bus, NPT joint.

Example 3:
STUF-280W-DN100-1-2 stands for the STUF-280W water meter for pipe DN100 with M-Bus and metric flange joint.

For Concentrator:

280C-x-y

where x is type of the concentrator (0: M-Bus concentrator without storage, 1: M-Bus concentrator with storage, 2: BACnet concentrator without storage), y is the interface option on upper later side (0: M-Bus, 1: RS232).

Example 1: 280C-0-0: M-bus concentrator without storage, M-Bus interface to upper layer device.

Example 2: 280C-2: BACnet concentrator, no storage, BACnet interface to upper layer, M-Bus to lower layer.

For AMR Software and Billing Software:

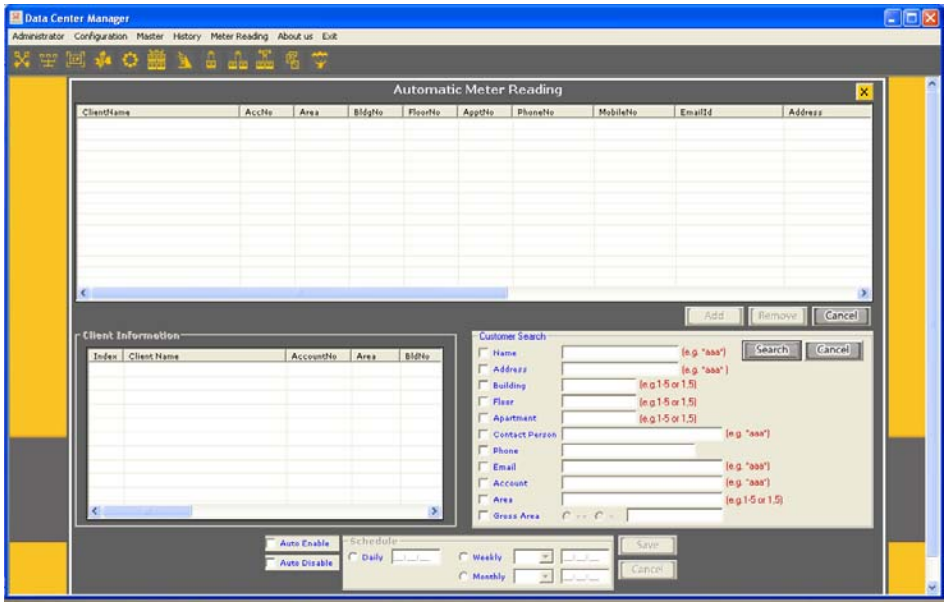

SHENITECH LLC, 10-214 Tower Office Park, Woburn, MA 01801, USA

Tel. 781 932-0900 / 888 738-0188(toll-free) Fax 978 418-9170 sales@shenitech.com www.shenitech.com